Product Specification Sheet

DTSP312XL-CD10

RoHS Compliant 25Gb/s SFP28 1310nm 10km Optical Transceiver

Product Features

●Supports up to 25.78Gb/s bit rates
●compliant to IEEE 802.3by
● compliant to SFF-8402 for SFP28 solution
●Digital Diagnostic Monitor Interface with SFF-8472
●Hot pluggable SFP+ footprint
●1310nm DFB transmitter
●Applicable for 10Km SMF connection
●High transmission margin
●Low power consumption<1.5W
●Single 3.3V power supply
●Operating case temperature: 0 to 70 °C

Applications

●25.78 Gb/s single lane
●Other optical links

Product Descriptions

DTSP312XL-CD10, 1310 nm DFB 25.78Gbps SFP+ transceiver is designed for use in 25Gb/s data rateover single-mode fiber for link length 10Km.

The transceiver designs are optimized for high perform-ance and cost effective to supply customers the best solutions for 25Gb/s single lane optical links.

Functional Diagram

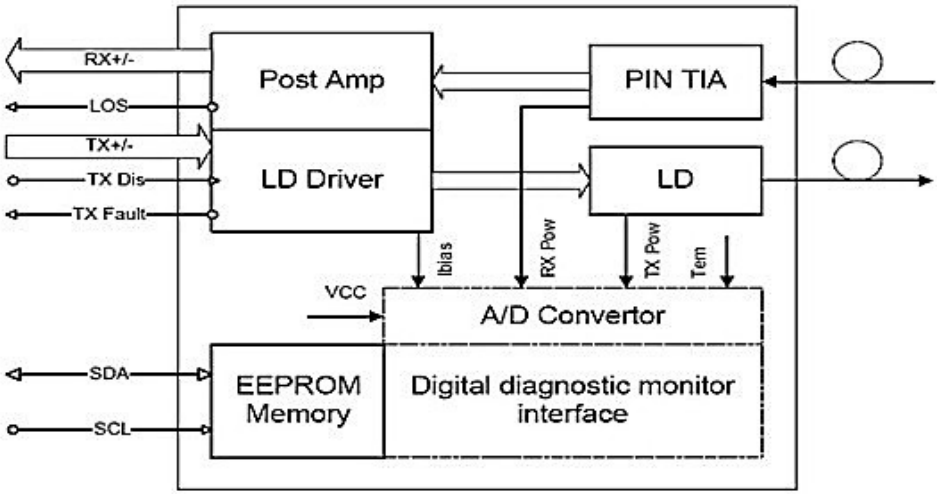

Absolute Maximum Ratings

Parameter	Symbol	Min.	Max.	Unit	Note
Supply Voltage	Vcc	-0.5	4.0	V	
Storage Temperature	Ts	-40	85	°C	
Relative Humidity	RH	0	85	%	

Note: Stress in excess of the maximum absolute ratings can cause permanent damage to the transceiver.

General Operating Characteristics

Parameter	Symbol	Min.	Typ	Max.	Unit	Note
Data Rate			25.78		Gb/s	
Supply Voltage	Vcc	3.13	3.3	3.47	V	
Supply Current	Icc_s			450	mA	
Operating Case Temp.	Tc	0		70	°C	

Electrical Characteristics (TOP(C) = 0 to 70 °C,VCC = 3.13 to 3.47 V)

Parameter		Symbol	Min.	Typ	Max.	Unit	Note
Transmitter							
Differential data input swing		VIN_{PP}	120		800	mV_{pp}	1
Tx Disable input	H	TD_H	2.0		Vcc+0.3	V	
	L	TD_L	0		0.8		
Tx Fault output	H	TF_H	2.0		Vcc+0.3	V	2
	L	TF_L	0		0.8		
Input differential impedance		Rin		100		Ω	
Receiver							
Differential data output swing		Vout,pp	340	650	800	mV_{pp}	3
Rx Los Output	H	V_{OH}	2.0		Vcc+0.3	V	2
	L	V_{OL}	0		0.8		

Note:

1. TD+/- are internally AC coupled with 100Ω differential termination inside the module.
2. Tx Fault and Rx LOS are open collector outputs, which should be pulled up with 4.7k to 10kΩ resistors on the host board. Pull up voltage between 2.0V and Vcc+0.3V.

3. RD+/- outputs are internally AC coupled, and should be terminated with 100Ω (differential) at the user SERDES.

Optical Characteristics (TOP(C) = 0 to 70 °C, TOP(I) =-40 to 85 °C,VCC = 3.13 to 3.47 V)

Parameter	Symbol	Min.	Typ	Max.	Unit	Note
Transmitter						
Operating Wavelength	λ	1295	1310	1325	nm	
Ave. output power (Enabled)	P_{AVE}	-7		2	dBm	1
Side-Mode Suppression Ratio	SMSR	30			dB	
Extinction Ratio	ER	3.5			dB	
RMS spectral width(-20dB)	Δλ			1	nm	
Dispersion penalty	T_{DP}			2.7	dB	
Relative Intensity Noise	R_{IN}			-130	dB/Hz	
Receiver						
Operating Wavelength		1260		1610	nm	
Receiver Sensitivity(OMA)	P_{Sen}			-11.3	dBm	2
Average Receiver Power	P_{imax}	-13.3		2	dBm	
LOS Assert	Pa	-30			dBm	
LOS De-assert	Pd			-14	dBm	
LOS Hysteresis	Pd-Pa	1		5	dB	

Notes:

1. Average power figures are informative only, per IEEE 802.3cc.
2. Measured at the BER less than $1E^{-5}$, back to back. The measure pattern is PRBS 2^{31-1} with worst ER=4.5@ 25.78Gb/s.

Pin Defintion And Functions

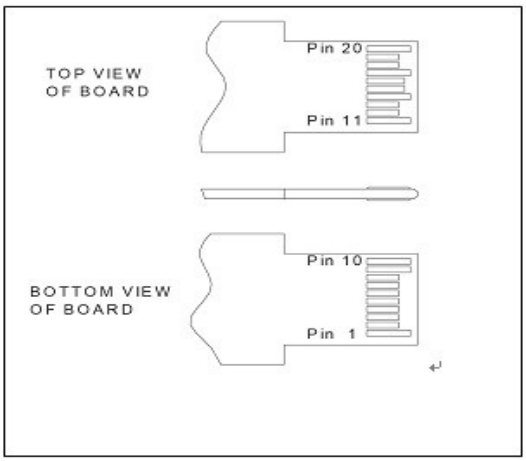

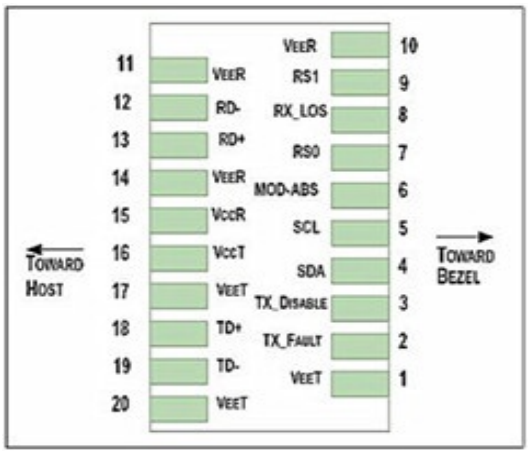

Pin	Symbol	Name/Description
1	VEET [1]	Transmitter Ground
2	Tx_FAULT [2]	Transmitter Fault
3	Tx_DIS [3]	Transmitter Disable. Laser output disabled on high or open
4	SDA [2]	2-wire Serial Interface Data Line
5	SCL [2]	2-wire Serial Interface Clock Line
6	MOD_ABS [4]	Module Absent. Grounded within the module
7	RS0 [5]	Rate Select 0

8	RX_LOS [2]	Loss of Signal indication. Logic 0 indicates normal operation
9	RS1 [5]	Rate Select 1
10	VEER [1]	Receiver Ground
11	VEER [1]	Receiver Ground
12	RD-	Receiver Inverted DATA out. AC Coupled
13	RD+	Receiver DATA out. AC Coupled
14	VEER [1]	Receiver Ground
15	VCCR	Receiver Power Supply
16	VCCT	Transmitter Power Supply
17	VEET [1]	Transmitter Ground
18	TD+	Transmitter DATA in. AC Coupled
19	TD-	Transmitter Inverted DATA in. AC Coupled
20	VEET [1]	Transmitter Ground

Notes:

1.Module circuit ground is isolated from module chassis ground within the module.
2.should be pulled up with 4.7k – 10k ohms on host board to a voltage between 3.15Vand 3.6V.
3.Tx_Disable is an input contact with a 4.7 kΩ to 10 kΩ pullup to VccT inside the module.
4.Mod_ABS is connected to VeeT or VeeR in the SFP+ module. The host may pull this contact up to Vcc_Host with a resistor in the range 4.7 kΩ to10 kΩ.Mod_ABS is asserted "High" when the SFP+ module is physically absent from a host slot.
5. RS0 and RS1 are module inputs and are pulled low to VeeT with > 30 kΩ resistors in the module.

Typical Interface Circuit

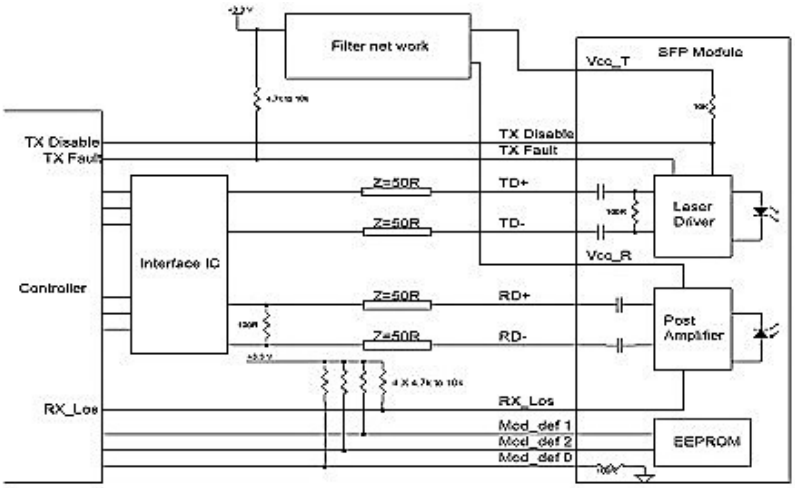

Recommended power supply filter

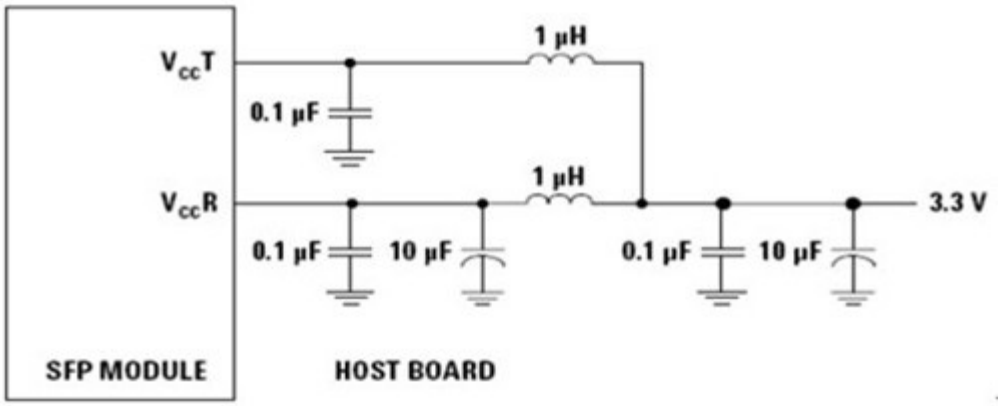

Note:

Inductors with DC resistance of less than 1Ω should be used in order to maintain the required voltage at the SFP input pin with 3.3V supply voltage. When the recommended supply filtering network is used, hot plugging of the SFP transceiver module will result in an inrush current of no more than 30 mA greater than the steady state value

Package Dimensions

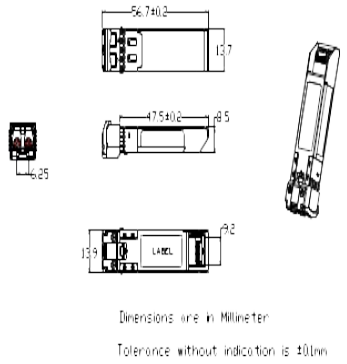

Ordering Information

Part Number	Description
DTSP312XL-CD10	SFP+, up to 25.78Gb/s, 1310nm, 10km, 0~70℃, with Digital Diagnostic Monitor