<<< User Manual

Mobile signal repeater

lintratek

Foshan lintratek Technology Co., Ltd.

Product specification

Model No		KW13D-LGDWL	
Parameter data		Uplink	Downlink
Frequency Range	CDMA800+EGSM +DCS+WCDMA +LTE	800MHz:832-862MHz 900MHz:880-915MHz 1800MHz:1710-1785MHz 2100MHz:1920-1980MHz 2600MHz:2500-2570MHz	800MHz:791-821MHz 900MHz:925-960MHz 1800MHz:1805-1880MHz 2100MHz:2110-2170MHz 2600MHz:2620-2690MHz
Output Power		13 ±2dBm	13±2dBm
Gain		60 ±2 dB	65±2dB
Power Supply		AC：100~240V, 50/ 60Hz；DC：12V 3A	
Power Comsumption		< 10W	
Impedance		50 ohm	
Mechanical Specification			
RF Connector		N-Female	
Dimensions (D*W*H)		200*140*30（mm）	
Cooling		Heatsink Convection cooling	
Net weight		< 1.4Kg	
Packing size (D*W*H)		220*155*50mm	
Gross weight		< 1.9Kg	
Installation Type		Wall Installation	
Environment Conditions		IP40	
Humidity		< 90%	
Operating Temperature		-10℃ ~ 55℃	

Outdoor LPDA antenna

Cable

Indoor Panel antenna

Power supply

Mobile signal repeater

User manual

Instruction

BS PORT
To connect the outdoor antenna

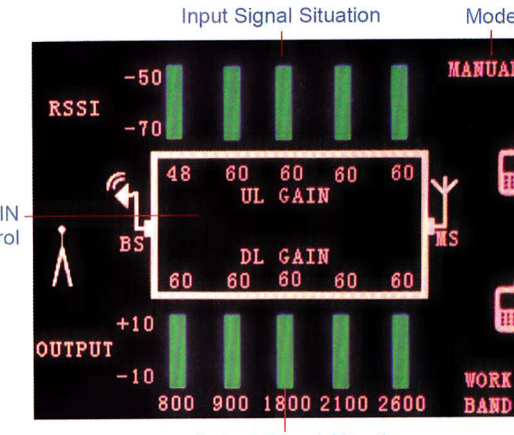

Use the botton to increase or decrease UL/DL GAIN .

Installation Step

Step 1: Install the outdoor antenna LPDA antenna on the top of building or other good signal places. Please ensure it is towards to base station or cell tower, which can receive very good signal(better than -70dBm).

Step 2: Connect the outdoor antenna to the signal repeater BS Port by cable. The joint of outdoor antenna and cable should be wrapped well with waterproof tape.

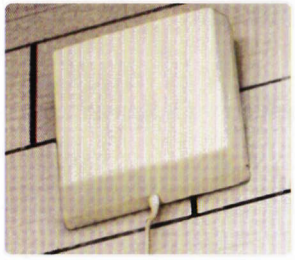

Step 3: Signal repeater MS Port connect to indoor antennas Panel antenna by cable or directly connect to indoor antenna. If more than one antenna, please connect with the splitter first.

Step 4: After finish installed all kits then check carefully whether all cables connectors tightly. Then, please plug in the power supply.

Attention: Indoor antenna and outdoor antenna should be separated by a brick wall. To avoid self-oscillation phenomenon.

Connection diagram

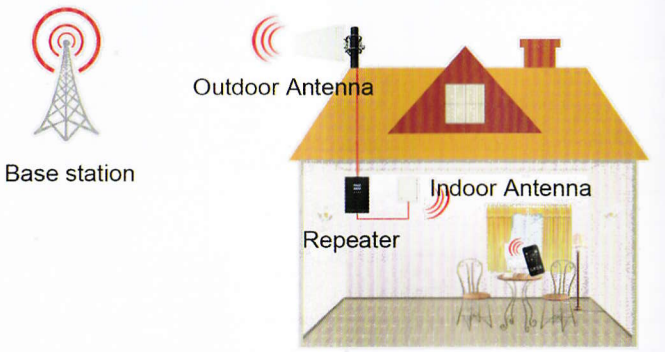

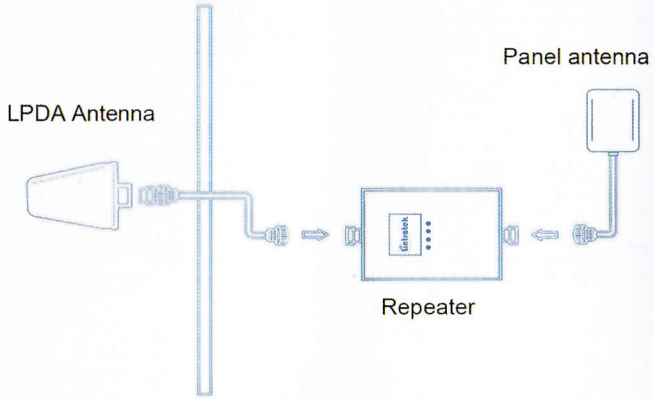

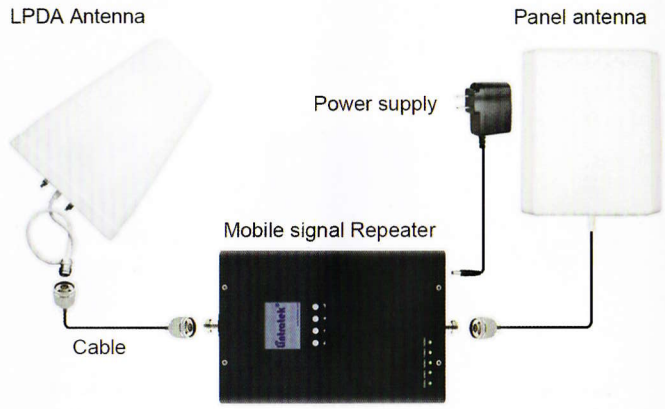

Frequently Asked Questions

FAQ	Solutions
After installed booster signal not be very good,indoor signal coverage very small	1、adjust outdoor antenna's location and direction 2、check whether cable connected well. 3、put more higher receiving antenna's position,which can received more good signal. 4、change another bigger power booster. 5、change another high gain receiving antenna.
Cellphone signal full bar, but communication quality bad	Too closer distance of indoor and outdoor antenna, need more separation far distance away between antennas
After installed booster not only signal be good, but also more bad	Too closer distance of indoor and outdoor antenna, need more separation far distance away between antennas
Works good for long time, suddenly signal bad	1、check outdoor cable connectors whether flooding water. 2、check power lights whether working normal.
Signal lattice blank and blink	On behalf of no input signal or the input signal is not strong enough,The position or direction of the outdoor receiving antenna can be adjusted.

	Can change below two modes by button. MANUAL: MGC(Manual gain control) AUTO: AGC(Auto gain control)
	Frequency indicate: when power on frequency light be green,when repeater normal working and stable,the frequency light will be turn long red.
	RSSI: the repeater received input signal strength range(green bar is the real input signal strength).
	Output power: the repeater output power range(green bar is the real output power).
	Display Current frequency downlink working situation: Pin: input signal strength. Pout: Output power. Gain: downlink gain.