YDL-NTH **Ethernet IP**

Temperature and Humidity Transmitter

Instructions

(Remarks: There is a protective film on the surface of the screen lens, which may cause certain scratches during transportation. After the installation, tear it off.)

In the context of the Internet boom today, IP networks have penetrated into all walks of life, and more and more users tend to use IP network transmission methods to acquire and deliver various data.

In order to comply with the trend and trend of the Internet, we have introduced this YDL-NTH network temperature and humidity transmitter.

The device realizes Ethernet data transmission based on IP network, can collect the temperature and humidity value of the system through TCP and UDP, supports active data uploading, and has a built-in web server, which can conveniently view the current ambient temperature and humidity value through a web browser. At the same time, the SNMP V1 protocol is supported, which facilitates user management and system access.

At the same time, the device has a built-in switch input, which can be connected to the switch input signal such as water leakage and smoke.

The device can be used in data center equipment rooms, power base stations, medical warehouses, archive rooms, cold chain warehouses, laboratories, etc., as well as other places where temperature and humidity measurement and control are required.

一. Main features

(1) Support multiple transmission modes such as TCP/UDP and SNMP。

(2) In Ethernet transmission mode, built-in TCP server, UDP server, real-time monitoring of user data

(3) Built-in web server, which can easily access the current device temperature and humidity value through a web browser.

(4) Support SNMP V1 simple network management protocol to facilitate user management of devices.

(5) Support active uploading of data, and actively send the temperature and humidity values to the IP server specified by the user.

(6) Timing upload time interval is adjustable on site to meet different user needs.

(7) Supports DHCP function, which can dynamically obtain IP, gateway and mask.

(8) The port has EMC design, strong anti-interference ability and high long-term stability.

(9) Wall-mounted, ceiling structure design, easy to install.

(10) The magnet is embedded in the bottom, which is convenient for users to install on the metal wall surface such as the cabinet. It can directly absorb the surface and is free from screw installation.

(11) Wide temperature LCD large screen display design, light and beautiful.

(12) High-precision temperature and humidity sensor imported from Switzerland, high precision and good consistency.

(13) Fast and terminal, RJ45 standard network port interface, safe and reliable.

(14) Lightning protection design, using industrial grade communication chips. Adapt to various working environments.

(14) With a switch input interface, it can be connected to water leakage, smoke, etc.

二. Technical Parameters

Product number		YDL-NTH
Working environment	Power input range	External power supply DC5-24V or IEEE802.3 af, POE power supply optional
	Rated power	≤0.8W

	Temperature range	-20℃～70℃
	Humidity range	0%～99.9%RH
	Atmospheric pressure range	70～106kpa
Temperature and humidity measurement parameters	Measuring range	-40℃-100℃ range selectable
	Measurement accuracy	Temperature: ±0.5℃ (Built-in probe at 25 ° C and wall mounted) ±0.3%(External probe at 25 ℃) Humidity: ±5%(Built-in probe at 25 ℃ and wall mounted) ±3% (External probe at 25 ℃)
	Display method	LCD display, resolution 0.1
	Output method	Multiple standard communication protocol output (TCP, UDP, SNMP, built-in WEB direct access)
Switch input	One channel	It can receive switch signals such as water leakage and smoke
RS485 interface	One channel	With UDP passthrough. Customizable RS485 device parameter function (customized according to customer requirements, default without acquisition function)
EMC indicator	Static Protection	Contact discharge: ±6KV; air discharge: ±8KV
	EFT protection	±2KV
Outline size	Length × width × height	86×86×35 mm
Ethernet interface	Interface mode	RJ45
	Network rate	10M/100M full or half duplex adaptive

三. Parameter settings

The buttons provide basic parameter settings. The specific process is as follows。

1、Key Function(From left to right, the “MENU”, “▲”, “▼” and “ENTER” function keys are MENU, UP, DOWM and ENTER.)

MENU: Press the “MENU” button to switch the setting function interface.

△: Press the "Up" button to scroll up and increase the setting.

▽: Press the "Down" button to scroll down and decrease the setting.

ENTER: Press "ENTER" to confirm the value and save it.

2、Device identification address and device ID setting

In the power-on display interface, press and hold the "MENU" button for 3 seconds to enter the device identification address and device ID setting process. The basic setting process is as follows:

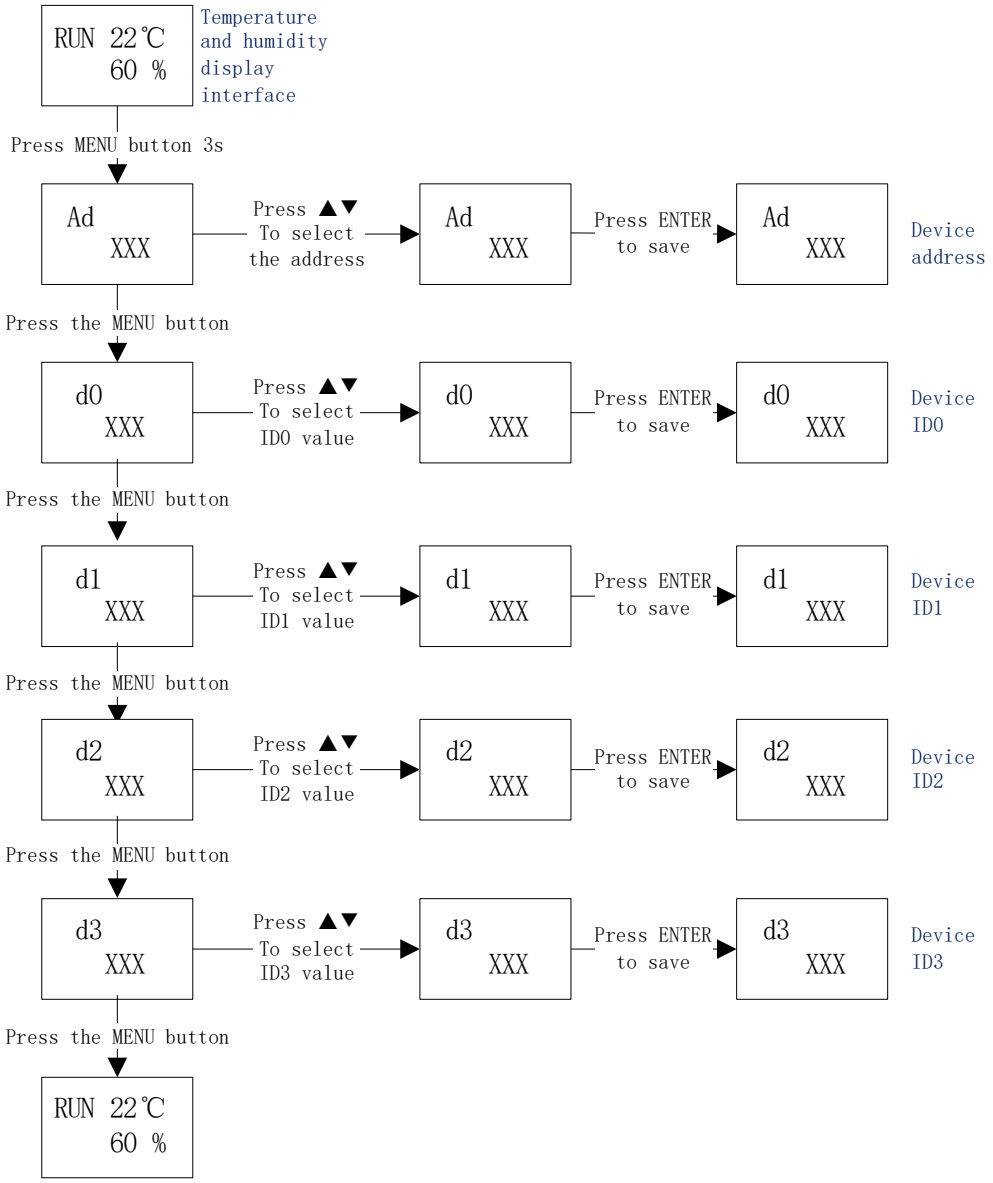

3、Device local IP address related information setting function

In the power-on display interface, press and hold the "▲" button for about 3 seconds to enter the IP related information setting interface of the machine. The basic steps are as follows:

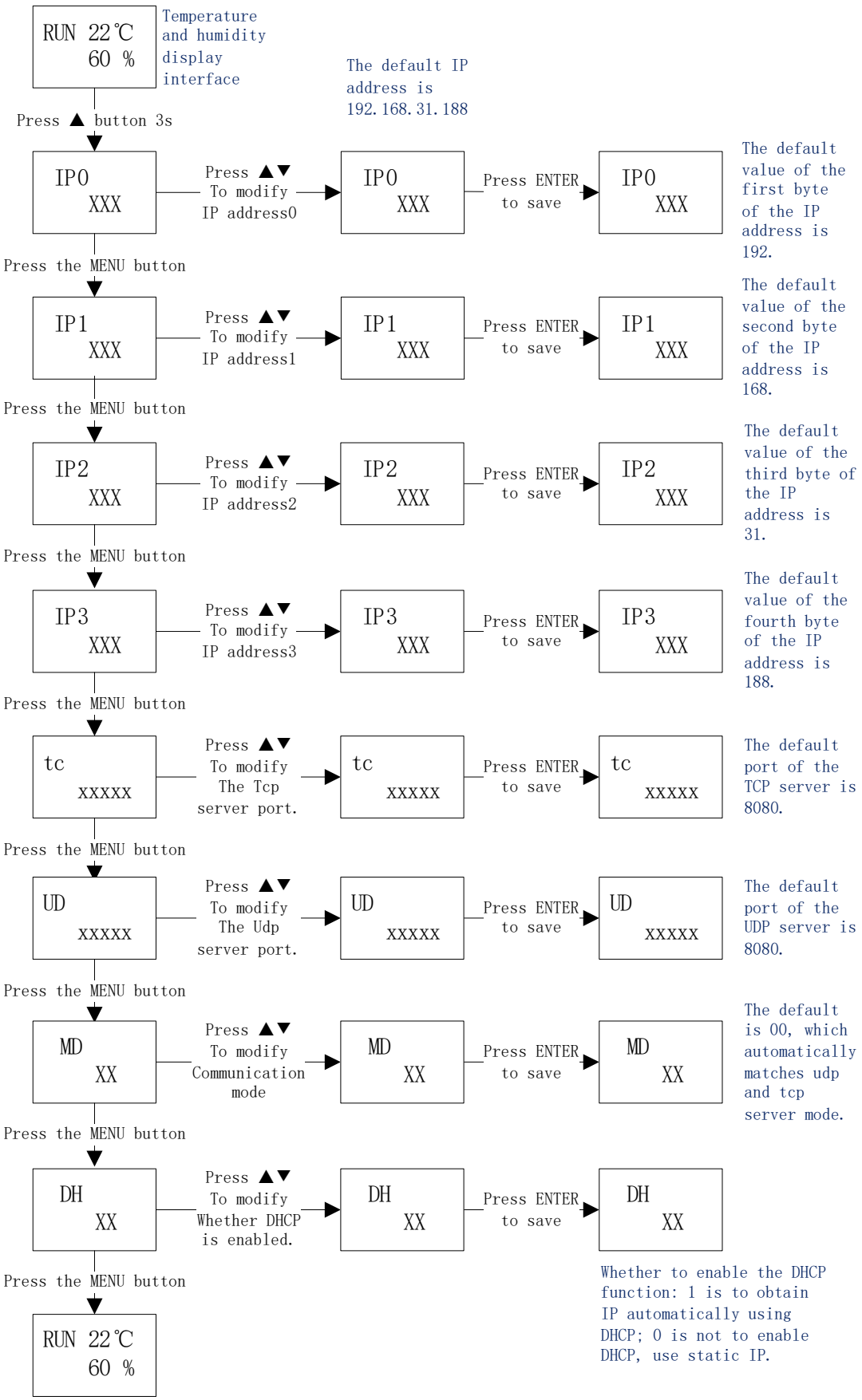
RUN 22℃
60 %
Temperature and humidity display interface
The default IP address is 192.168.31.188
Press ▲ button 3s
IP0
XXX
Press ▲▼ To modify IP address0
IP0
XXX
Press ENTER to save
IP0
XXX
The default value of the first byte of the IP address is 192.
Press the MENU button
IP1
XXX
Press ▲▼ To modify IP address1
IP1
XXX
Press ENTER to save
IP1
XXX
The default value of the second byte of the IP address is 168.
Press the MENU button
IP2
XXX
Press ▲▼ To modify IP address2
IP2
XXX
Press ENTER to save
IP2
XXX
The default value of the third byte of the IP address is 31.
Press the MENU button
IP3
XXX
Press ▲▼ To modify IP address3
IP3
XXX
Press ENTER to save
IP3
XXX
The default value of the fourth byte of the IP address is 188.
Press the MENU button
tc
XXXXX
Press ▲▼ To modify The Tcp server port.
tc
XXXXX
Press ENTER to save
tc
XXXXX
The default port of the TCP server is 8080.
Press the MENU button
UD
XXXXX
Press ▲▼ To modify The Udp server port.
UD
XXXXX
Press ENTER to save
UD
XXXXX
The default port of the UDP server is 8080.
Press the MENU button
MD
XX
Press ▲▼ To modify Communication mode
MD
XX
Press ENTER to save
MD
XX
The default is 00, which automatically matches udp and tcp server mode.
Press the MENU button
DH
XX
Press ▲▼ To modify Whether DHCP is enabled.
DH
XX
Press ENTER to save
DH
XX
Whether to enable the DHCP function: 1 is to obtain IP automatically using DHCP; 0 is not to enable DHCP, use static IP.
Press the MENU button
RUN 22℃
60 %

Remarks: 1. The local IP refers to the IP address of the device itself, that is, the IP value displayed at the bottom of the device screen. (After the IP information is successfully modified, you need to power off and restart to take effect)

2. The value of the communication mode MD can be set to 0-5, and the meanings of the values are as follows:

(a) A value of 0 indicates a full-featured mode:

Built-in TCP server and UDP mode, and automatically match the port mode of UDP and TCP, that is, which IP and port the other party sent data when receiving data, the data replied by the device will be automatically sent to the IP and port.

At the same time, the SNMP function and WEB function are enabled.

(b) A value of 1 indicates that only the UDP mode of the device is turned on. At this point, the device can only communicate in UDP mode.

(c) A value of 2 means that only the TCP server mode of the device is turned on. At this time, the host computer can only communicate with the device as a TCP client.

(d) A value of 3 means that only the TCP client mode of the device is turned on. At this time, the host computer can only communicate with the device as a TCP server, and the device will automatically connect to the TCP server of the host computer. If no data is received within a certain period of time, the reconnection will be automatically disconnected.

(e) A value of 4 indicates that only the Alibaba Cloud IoT platform mode of the device is turned on. At this point, the device will actively connect to and communicate with the designated Alibaba Cloud IoT platform.

(e) A value of 5 indicates that the Yundir IoT platform mode is only enabled for the device. At this point, the device will actively connect to and communicate with the designated Yundier IoT platform.

3. When the DH value is 1, the device enables DHCP to automatically obtain IP. After the device accesses the network cable, the device automatically obtains IP, gateway, and mask information. The static IP address, gateway, and mask are manually set by using the button. Invalid information;

When the DH value is 0, the device does not enable the DHCP function. At this time, the device uses a static IP address. When the device accesses the network cable, it is automatically initialized to the IP, gateway, and mask manually configured by the button.

4、Remote IP address related information setting function

In the power-on display interface, press and hold the “▼” button for about 3 seconds to enter the remote IP related information setting interface. The basic steps are as follows:

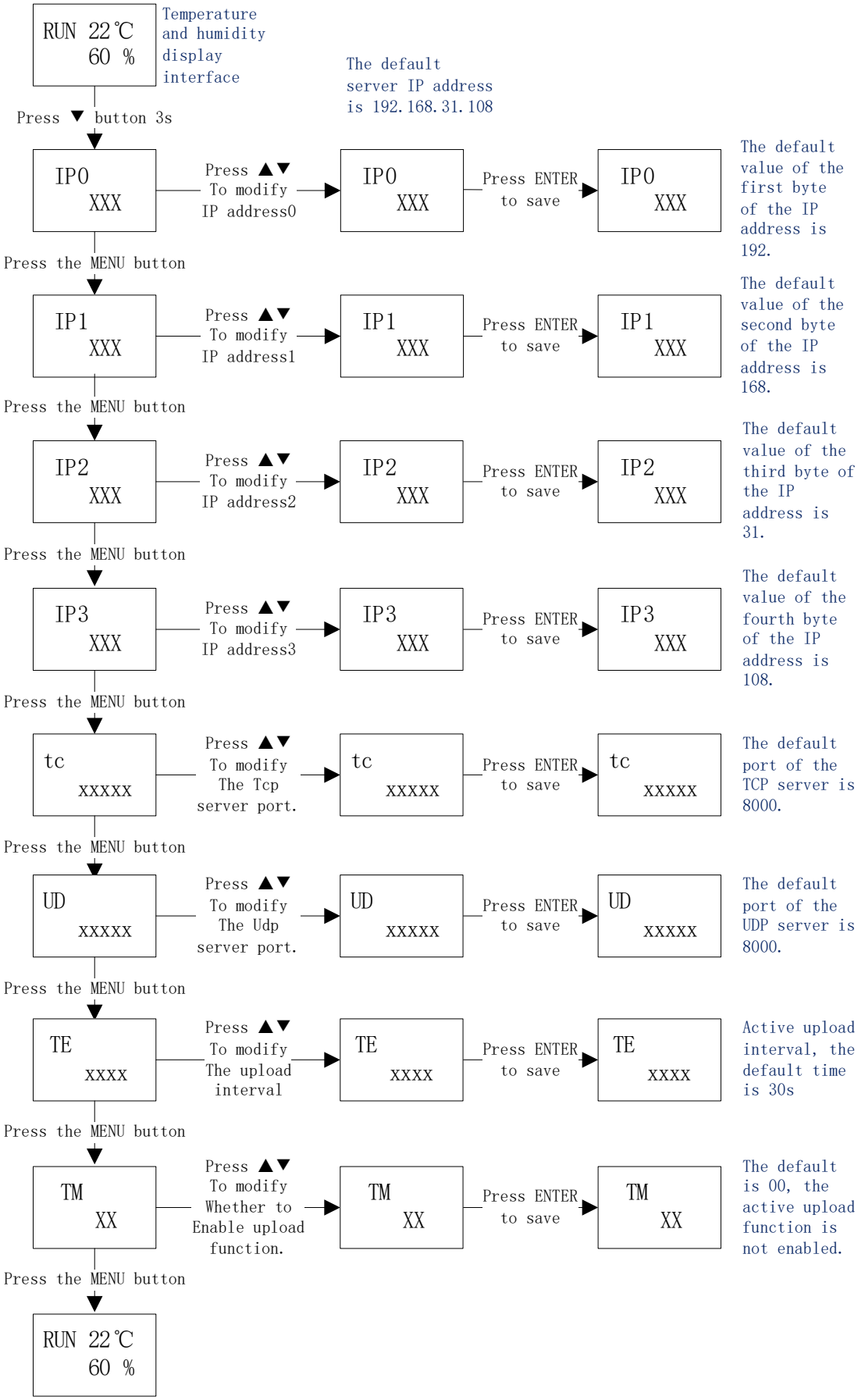
RUN 22℃ 60 %
Temperature and humidity display interface
The default server IP address is 192.168.31.108
Press ▼ button 3s
IP0 XXX
Press ▲▼ To modify IP address0
IP0 XXX
Press ENTER to save
IP0 XXX
The default value of the first byte of the IP address is 192.
Press the MENU button
IP1 XXX
Press ▲▼ To modify IP address1
IP1 XXX
Press ENTER to save
IP1 XXX
The default value of the second byte of the IP address is 168.
Press the MENU button
IP2 XXX
Press ▲▼ To modify IP address2
IP2 XXX
Press ENTER to save
IP2 XXX
The default value of the third byte of the IP address is 31.
Press the MENU button
IP3 XXX
Press ▲▼ To modify IP address3
IP3 XXX
Press ENTER to save
IP3 XXX
The default value of the fourth byte of the IP address is 108.
Press the MENU button
tc XXXXX
Press ▲▼ To modify The Tcp server port.
tc XXXXX
Press ENTER to save
tc XXXXX
The default port of the TCP server is 8000.
Press the MENU button
UD XXXXX
Press ▲▼ To modify The Udp server port.
UD XXXXX
Press ENTER to save
UD XXXXX
The default port of the UDP server is 8000.
Press the MENU button
TE XXXX
Press ▲▼ To modify The upload interval
TE XXXX
Press ENTER to save
TE XXXX
Active upload interval, the default time is 30s
Press the MENU button
TM XX
Press ▲▼ To modify Whether to Enable upload function.
TM XX
Press ENTER to save
TM XX
The default is 00, the active upload function is not enabled.
Press the MENU button
RUN 22℃ 60 %

Remarks: 1. The remote IP address refers to the IP address corresponding to the server or PC software. Generally, it needs to be used when the active timing upload function or transparent transmission mode is enabled.
2. When the TM is set to 01, it indicates that the active upload mode of the device is enabled: the device sends a string of data packets to the port corresponding to the specified server IP address without a certain interval (TE xxxx). The user can obtain the data packet according to the packet. Data such as temperature and humidity collected by the current device.
The active mode can only be transmitted in UDP or TCP client mode: when the MD value is 0 or 1, it is automatically uploaded to the UDP port of the specified remote IP; when the MD value is 3, it is automatically uploaded to the TCP of the specified remote IP. Server port.

5、Native gateway address setting function

In the power-on display interface, press and hold the “ENTER” button for about 3 seconds to enter the local gateway address setting interface. The basic steps are as follows:

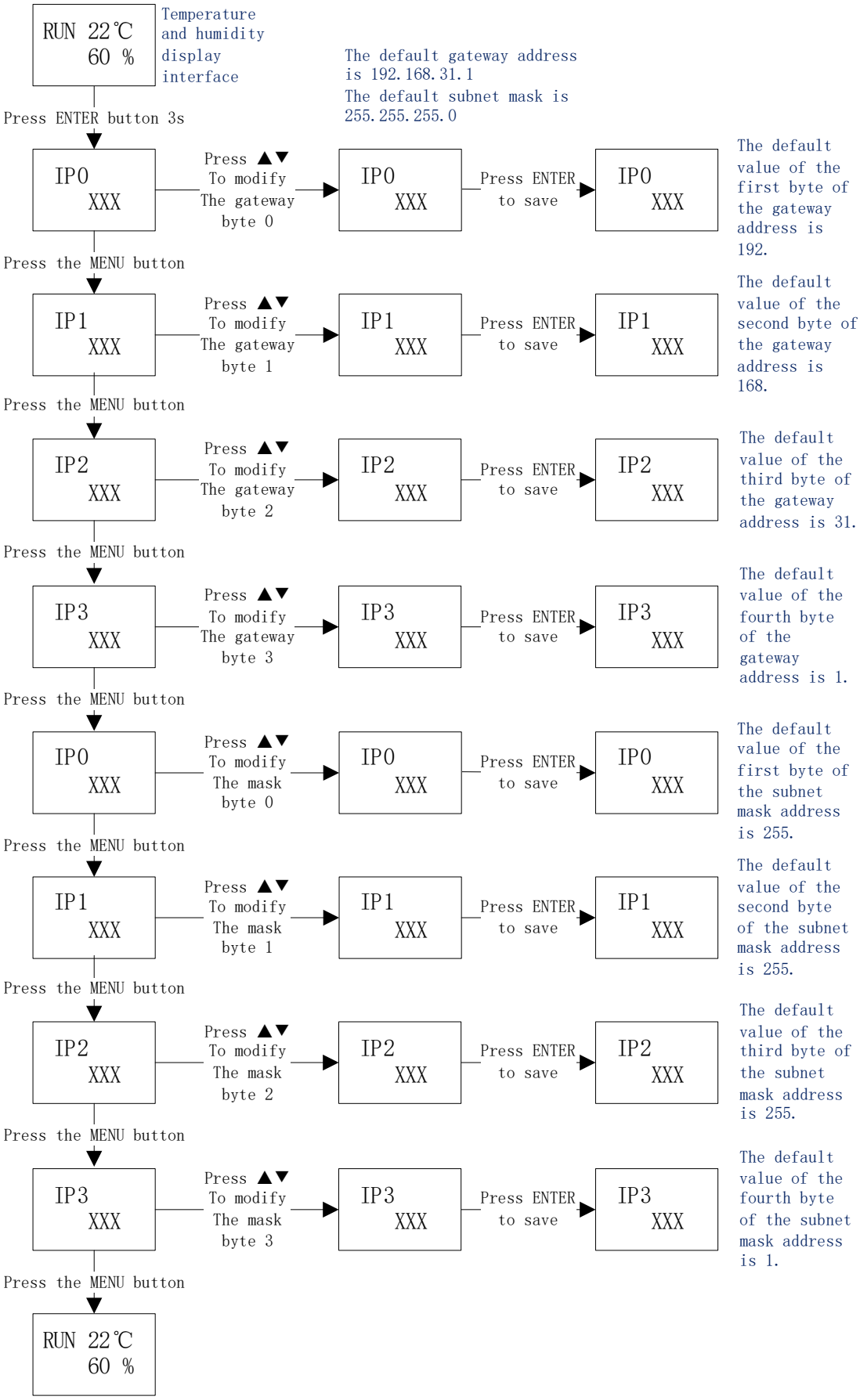
RUN 22℃
60 %
Temperature and humidity display interface
The default gateway address is 192.168.31.1
The default subnet mask is 255.255.255.0
Press ENTER button 3s
IP0 XXX
Press ▲▼ To modify The gateway byte 0
IP0 XXX
Press ENTER to save
IP0 XXX
The default value of the first byte of the gateway address is 192.
Press the MENU button
IP1 XXX
Press ▲▼ To modify The gateway byte 1
IP1 XXX
Press ENTER to save
IP1 XXX
The default value of the second byte of the gateway address is 168.
Press the MENU button
IP2 XXX
Press ▲▼ To modify The gateway byte 2
IP2 XXX
Press ENTER to save
IP2 XXX
The default value of the third byte of the gateway address is 31.
Press the MENU button
IP3 XXX
Press ▲▼ To modify The gateway byte 3
IP3 XXX
Press ENTER to save
IP3 XXX
The default value of the fourth byte of the gateway address is 1.
Press the MENU button
IP0 XXX
Press ▲▼ To modify The mask byte 0
IP0 XXX
Press ENTER to save
IP0 XXX
The default value of the first byte of the subnet mask address is 255.
Press the MENU button
IP1 XXX
Press ▲▼ To modify The mask byte 1
IP1 XXX
Press ENTER to save
IP1 XXX
The default value of the second byte of the subnet mask address is 255.
Press the MENU button
IP2 XXX
Press ▲▼ To modify The mask byte 2
IP2 XXX
Press ENTER to save
IP2 XXX
The default value of the third byte of the subnet mask address is 255.
Press the MENU button
IP3 XXX
Press ▲▼ To modify The mask byte 3
IP3 XXX
Press ENTER to save
IP3 XXX
The default value of the fourth byte of the subnet mask address is 1.
Press the MENU button
RUN 22℃
60 %

6、Calibration offset value setting function

In the power-on display interface, press and hold the "MENU" and "▲" buttons simultaneously for about 3 seconds, then enter the calibration offset value setting interface. The basic steps are as follows:

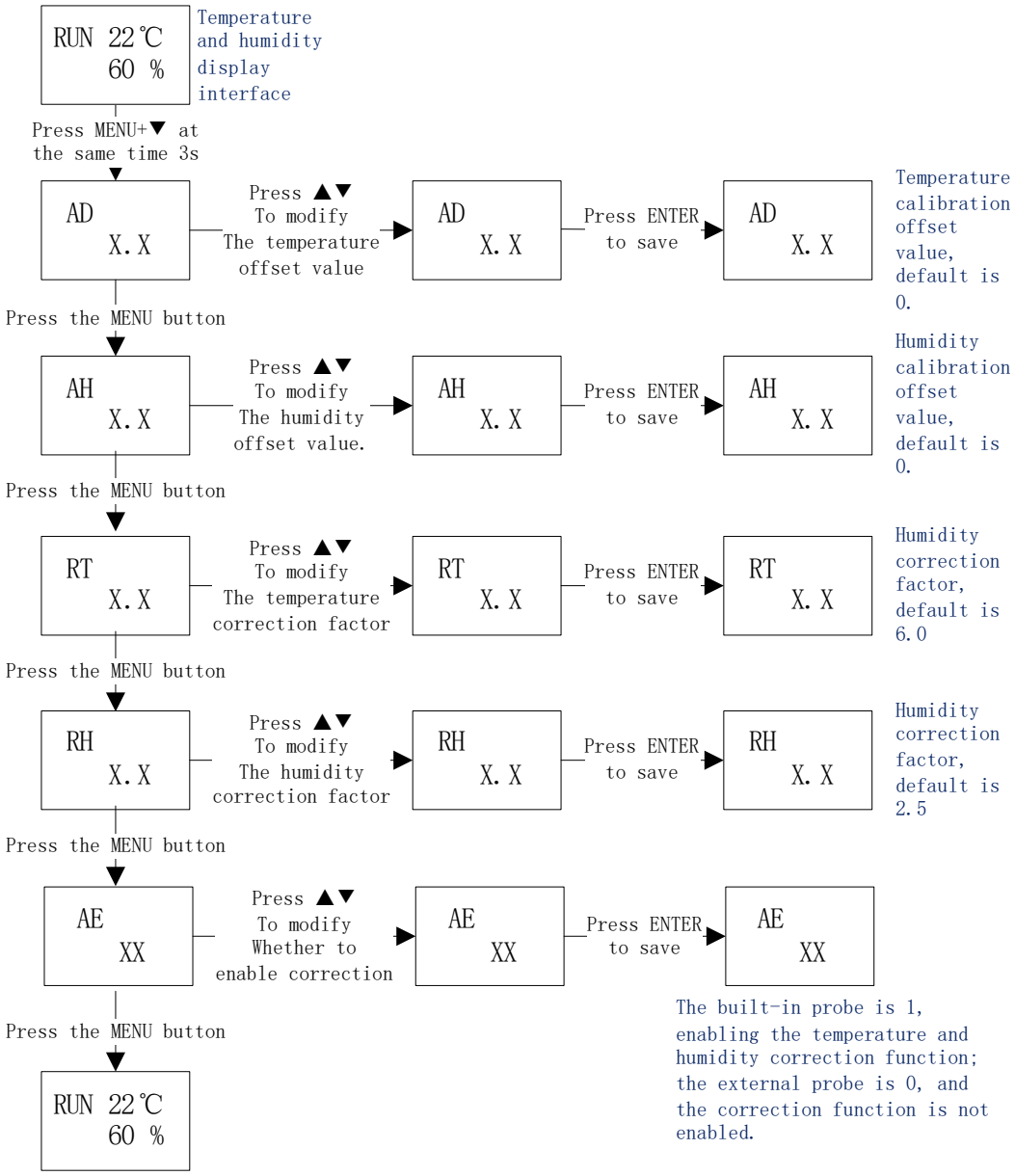

Note: For the temperature correction factor, it is only required to be enabled in the built-in probe version. The specific value is related to the specific environment in which the device is located. For example, when the device is placed flat on a water platform, the recommended value is 4.0; when the device is placed vertically on a wall, the recommended value is 6.0.

For the factory default temperature correction factor, it is the value when using the built-in probe version that requires wall mounting.

四. On-site debugging (host machine tool reading, WEB web page reading, mobile phone WEB access reading, SNMP protocol acquisition)

1、The debugging tool uses the TCP client method to obtain the temperature and humidity values.

2、The debugging tool uses the UDP client method to obtain the temperature and humidity values.

3、View current temperature and humidity values through a web browser

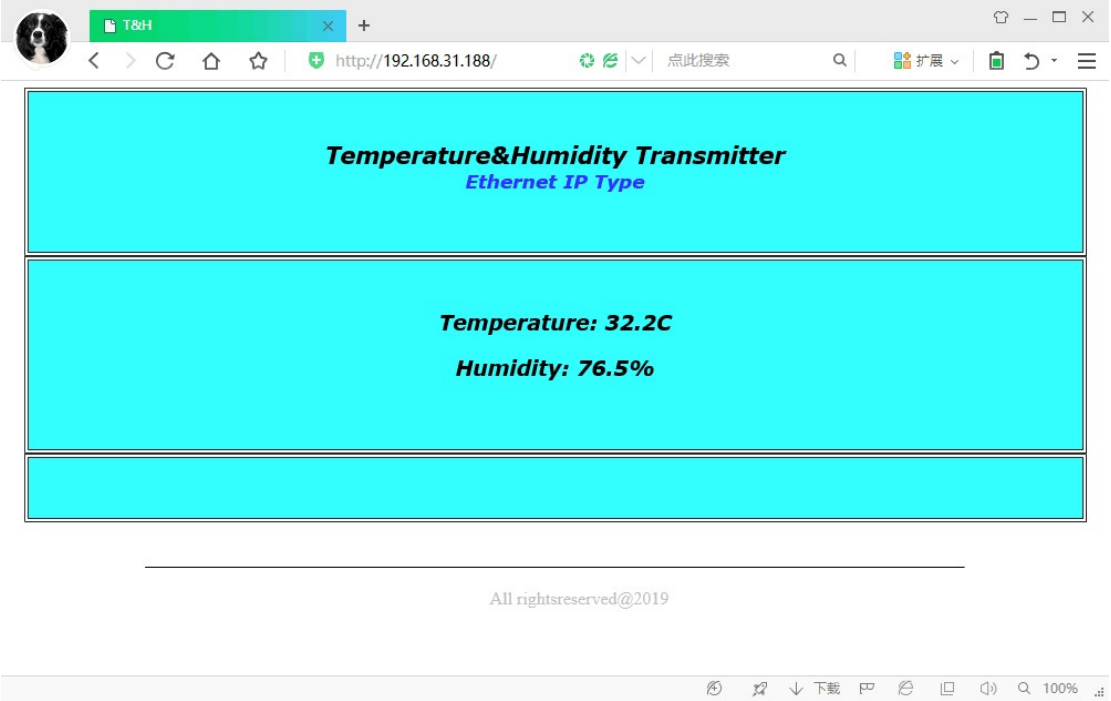

4、View current temperature and humidity values through your mobile browser

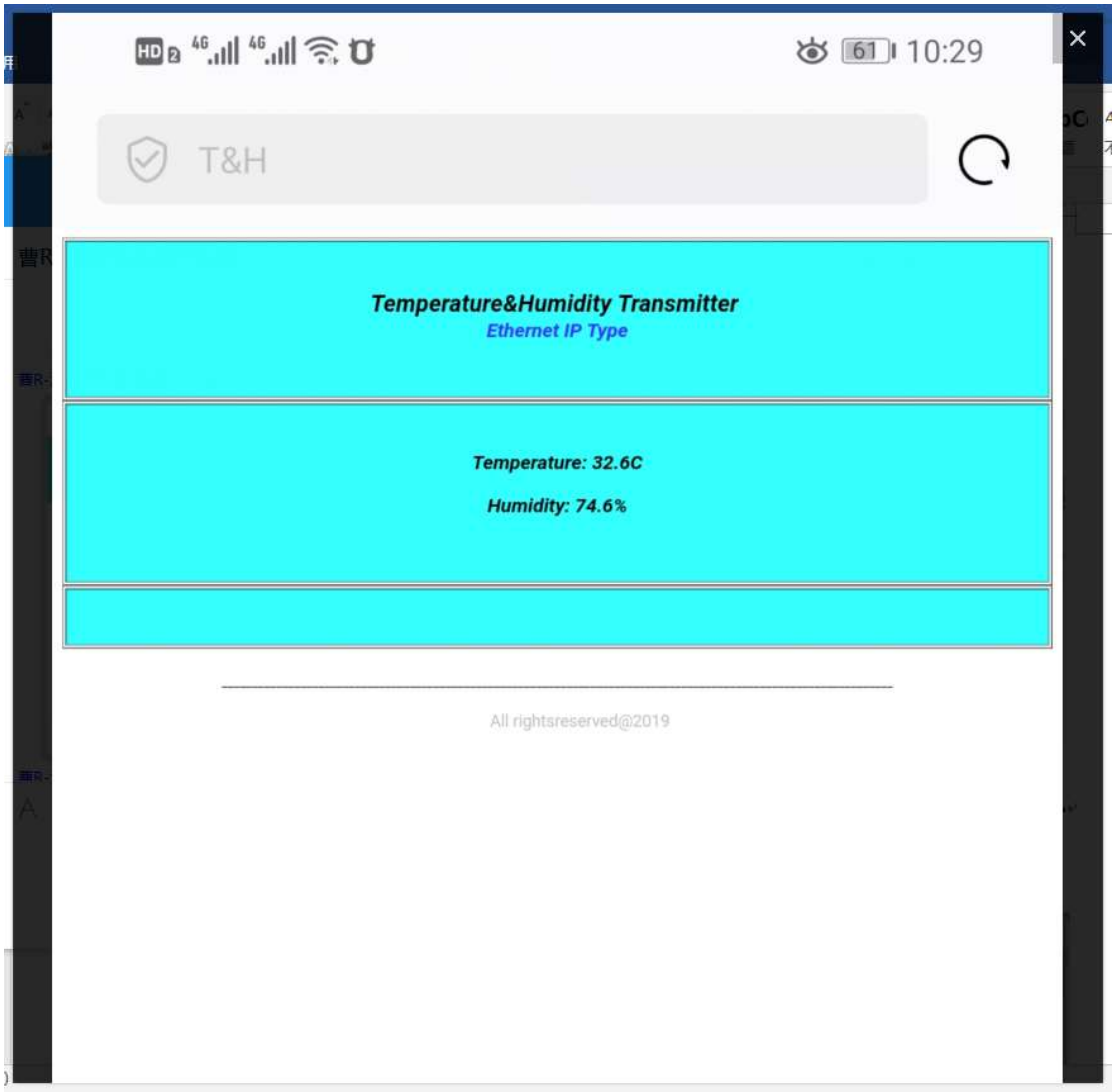

5、Obtain the current temperature and humidity value through the snmp protocol.

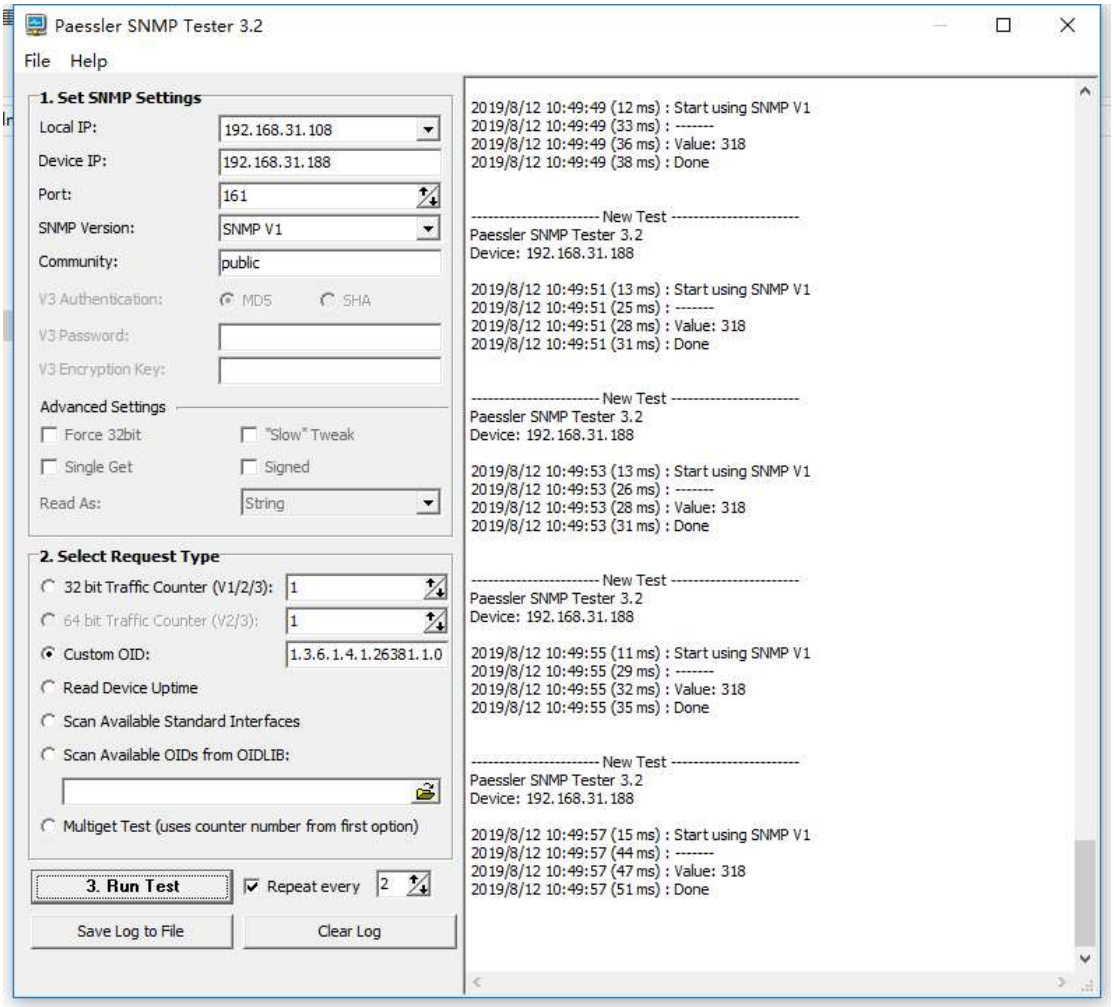

6、The network debugging tool SocketTool uses the UDP server mode to listen to the data actively uploaded by the device UDP.

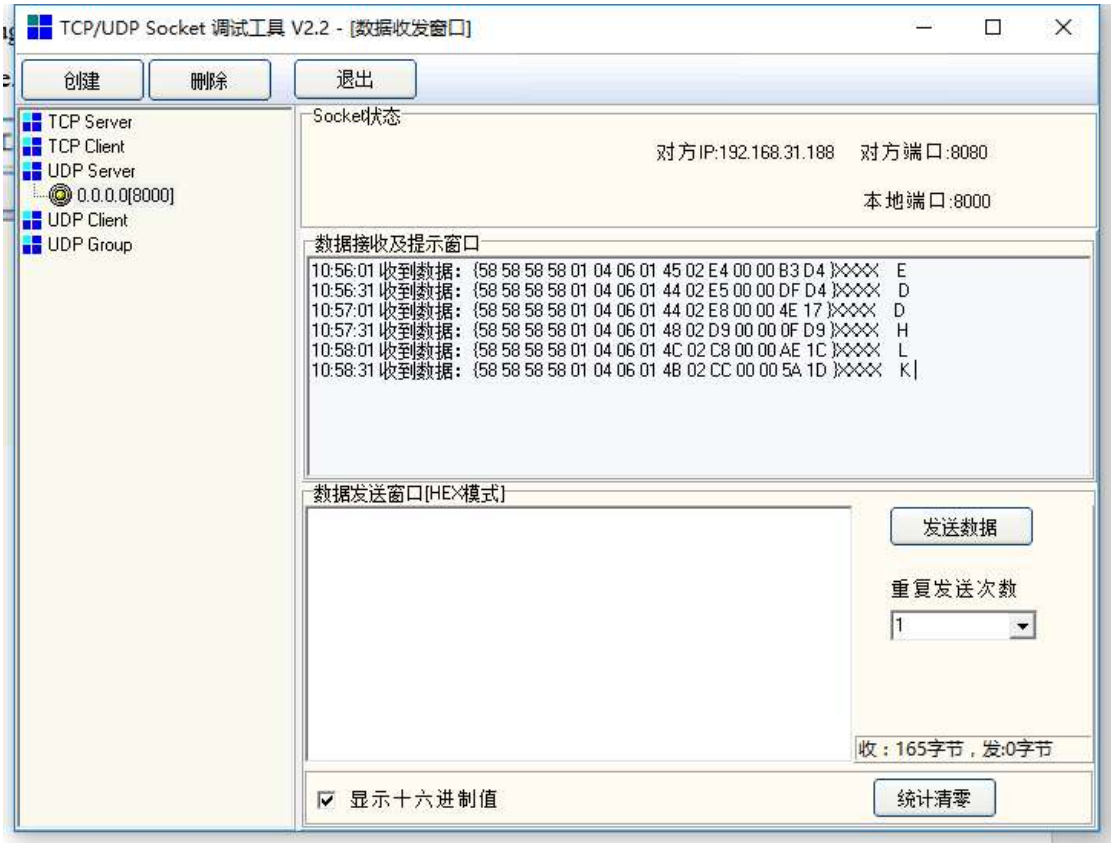

7、The network debugging tool SocketTool uses the TCP server mode to listen to the data actively uploaded by the TCP client.


TCP/UDP Socket 调试工具 V2.2 - [数据收发窗口]
创建
删除
退出
TCP Server
0.0.0.0[8000]
192.168.31.188[49156]
TCP Client
UDP Server
UDP Client
UDP Group
Socket状态
已连接
对方IP:192.168.31.188
对方端口:49156
断开
本地端口:8000
数据接收及提示窗口
10:16:33收到数据: {58 58 58 58 01 04 06 01 45 02 F8 00 00 72 12 }XXXX E
10:17:04收到数据: {58 58 58 58 01 04 06 01 45 02 F6 00 00 13 D1 }XXXX E
10:17:33收到数据: {58 58 58 58 01 04 06 01 44 02 FB 00 00 BF D2 }XXXX D
10:18:04收到数据: {58 58 58 58 01 04 06 01 47 02 F4 00 00 CB D1 }XXXX G
10:18:33收到数据: {58 58 58 58 01 04 06 01 47 02 ED 00 00 1A 16 }XXXX G
10:19:03收到数据: {58 58 58 58 01 04 06 01 45 02 F8 00 00 72 12 }XXXX E
10:19:33收到数据: {58 58 58 58 01 04 06 01 48 02 EB 00 00 AE 16 }XXXX H
数据发送窗口[HEX模式]
发送数据
重复发送次数
1
收：150字节，发:0字节
显示十六进制值
统计清零